REVISION DATA			
SYM	DESCRIPTION	DATE	APPROVED

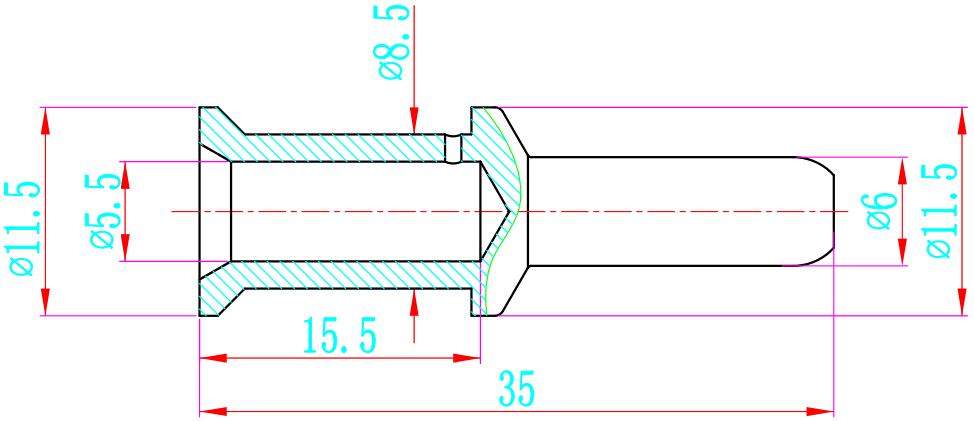

技术参数:
- 材料: 铜合金
- 表面处理: 镀银
- 额定电流: 70A
- 接触电阻: ≤0.5mΩ
- 线径范围: 16mm^2
- 可插拔次数: ≥500
- 电缆绞线标准: IEC 60228-5

Technical specification:
- Material: copper alloy
- Surface: hard-silver plated
- Rated current: 70A
- Contact resistance: ≤0.5mΩ
- Wire gauge: 16mm^2
- Mating cycles: ≥500
- For stranded fine wire acc. to: IEC 60228-5

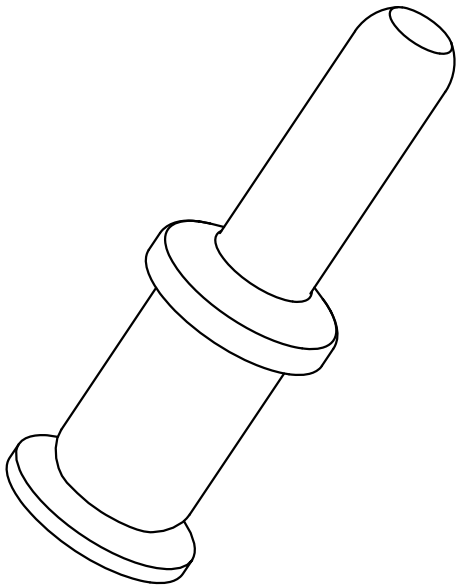

Tolerance		SIGNATURE	DATE	Units	mm	宁波欧科瑞连接器有限公司 NINGBO OUKERUI CONNECTOR CO, .LTD.		
0~≤6 ±0.03	DRAW			Size	A4			
6~≤20 ±0.06	DESIGN			Scale		PART NAME: HZW-CKSM70-16(公插针)		
20~≤50 ±0.10	CHECK			Sheet	1/1	Drawing NO.		REV
50~≤80 ±0.20	APPROVE			Proj.		Material	H62黄铜	A