REVISION DATA			
SYM	DESCRIPTION	DATE	APPROVED

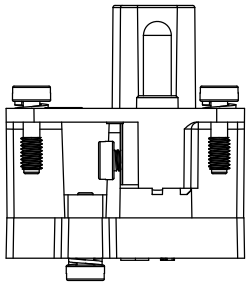

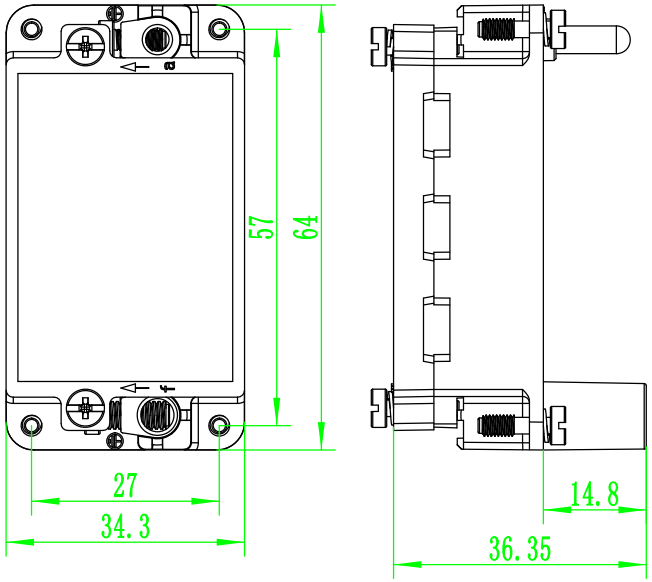

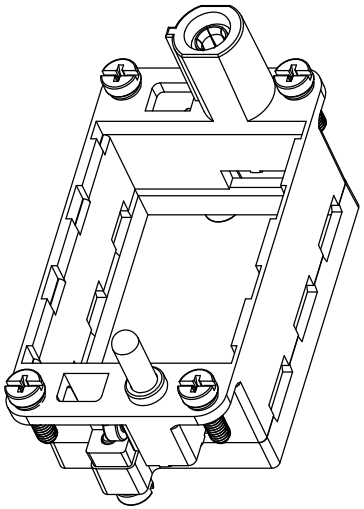

技术参数:
- 模块数量: 3
- 接地线:
  - 功率线: 4-10mm^2(12-8 AWG)
  - 信号线: 1-2.5mm^2(18-14 AWG)
- 材料: 压铸锌
- 温度范围: -40℃ - +125℃
- 可插拔次数: ≥500

Technical specification:
- No. of module: 3
- Wire gauge(PE contact):
  - Power side: 4-10mm^2(12-8 AWG)
  - Signal side: 1-2.5mm^2(18-14 AWG)
- Material: zinc die-cast
- Temperature range: -40℃ - +125℃
- Mating cycles: ≥500

Tolerance		SIGNATURE	DATE	Units	mm	宁波欧科瑞连接器有限公司 NINGBO OUKERUI CONNECTOR CO, .LTD.		
0~≤6 ±0.10	DRAW			Size	A4			
6~≤20 ±0.15	DESIGN			Scale		PART NAME:	HZW-HF10B-NLA	
20~≤50 ±0.20	CHECK			Sheet		Drawing NO.		REV
50~≤80 ±0.30	APPROVE			Proj.		Material	锌合金 (5#)	A