REVISION DATA				
SYM	ECN	DESCRIPTION	DATE	APPROVED

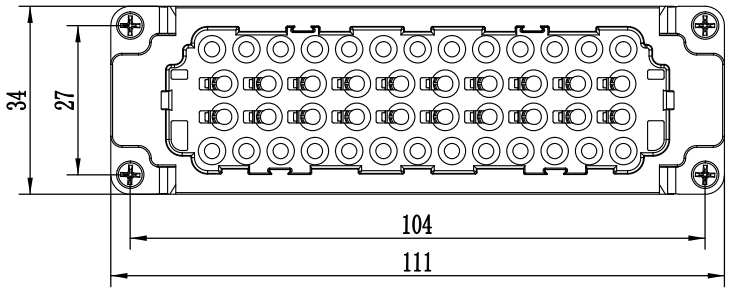

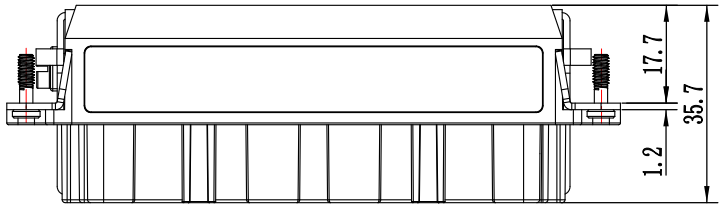

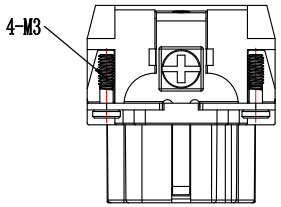

技术参数:

插芯:

- 插针数: 46+PE
- 额定电流: 16A
- 额定电压: 500V
- 额定脉冲电压: 6kV
- 污染等级: 3
- 额定电压: 600V
- 绝缘阻抗: ≥10^{10}Ω
- 材料: 聚碳酸酯
- 颜色: RAL 7032 (浅灰色)
- 温度范围: -40℃ - +125℃
- 阻燃等级: V0
- 可插拔次数: ≥500

插针:

- 接线方式: 弹片连接
- 材料: 铜合金
- 表面处理: 镀银
- 接触电阻: ≤3mΩ
- 线径范围: 0.5-2.5mm^2(20-14 AWG)
- 剥线长度: 9mm

Technical specification:

Insters:

- No. of contact: 46+PE
- Rated current: 16A
- Rated voltage: 500V
- Rated impulse voltage: 6kV
- Pollution degree: 3
- Rated voltage acc.to : 600V
- Insulation resistance: ≥10^{10}Ω
- Material: polycarbonate
- Colour: RAL 7032(light grey)
- Temperature range: -40℃ - +125℃
- Flammability acc: V0
- Mating cycles: ≥500

Contacts:

- Terminal: spring terminal
- Material: copper alloy
- Surface: hard-silver plated
- Contact resistance: ≤3mΩ
- Wire gauge: 0.5-2.5mm^2(20-14 AWG)
- Stripping length: 9mm

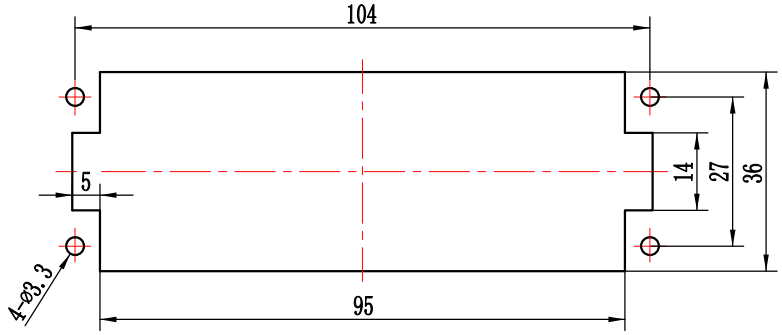

面板安装开孔图

Panel cut out

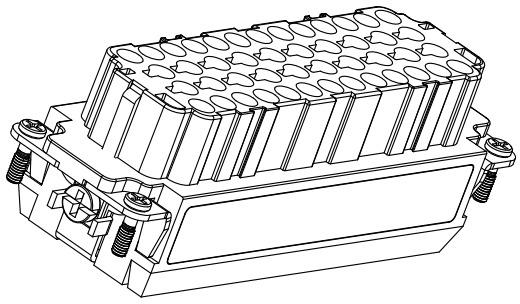

Tolerance		SIGNATURE	DATE	Units	mm	宁波欧科瑞连接器有限公司 NINGBO OUKERUI CONNECTOR CO.,LTD.		
0～≤20 ±0.15	DRAW			Size	A4			
20～≤50 ±0.25	DESIGN			Scale		PART NAME: HZW-HEE-046-FSP		
50～≤80 ±0.35	CHECK			Sheet		Drawing NO.		REV
80～≤120 ±0.50	APPROVE			Proj.		Material		A