REVISION DATA				
SYM	ECN	DESCRIPTION	DATE	APPROVED

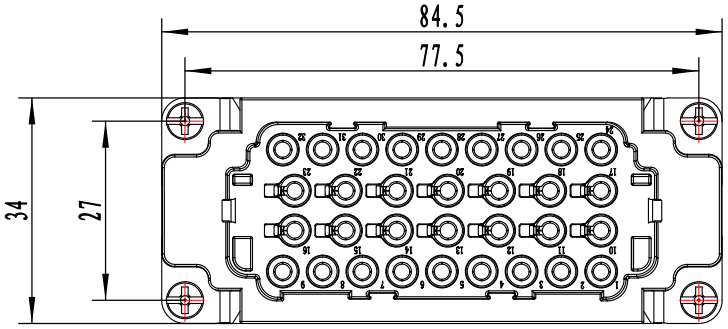

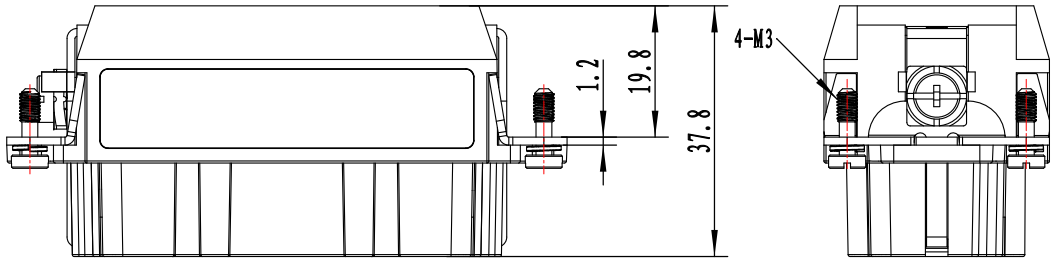

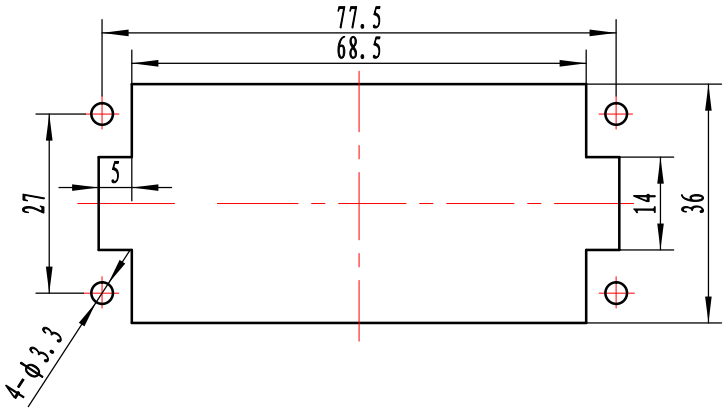

面板安装开孔图
Panel cut out

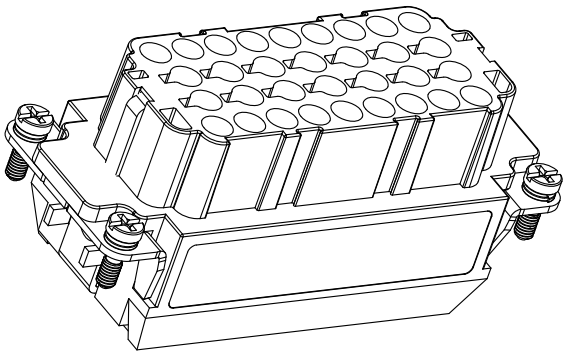

技术参数:
插芯:
- 插针数: 32+PE
- 额定电流: 16A
- 额定电压: 500V
- 额定脉冲电压: 6kV
- 污染等级: 3
- 额定电压: 600V
- 绝缘阻抗: ⩾$10^{10}\Omega$
- 材料: 聚碳酸酯
- 颜色: RAL 7032 (浅灰色)
- 温度范围: -40℃ - +125℃
- 阻燃等级: V0
- 可插拔次数: ⩾500

插针:
- 接线方式: 弹片连接
- 材料: 铜合金
- 表面处理: 镀银
- 接触电阻: ⩽3mΩ
- 线径范围: 0.5-2.5mm^2(20-14 AWG)
- 剥线长度: 9mm

Technical specification:
Insters:
- No. of contact: 32+PE
- Rated current: 16A
- Rated voltage: 500V
- Rated impulse voltage: 6kV
- Pollution degree: 3
- Rated voltage acc.to : 600V
- Insulation resistance: ⩾$10^{10}\Omega$
- Material: polycarbonate
- Colour: RAL 7032(light grey)
- Temperature range: -40℃ - +125℃
- Flammability acc: V0
- Mating cycles: ⩾500

Contacts:
- Terminal: spring terminal
- Material: copper alloy
- Surface: hard-silver plated
- Contact resistance: ⩽3mΩ
- Wire gauge: 0.5-2.5mm^2(20-14 AWG)
- Stripping length: 9mm

Tolerance		SIGNATURE	DATE	Units	mm	OUKERUI® 宁波欧科瑞连接器有限公司 NINGBO OUKERUI CONNECTOR CO.,LTD.		
0~⩽20 ±0.15	DRAW			Size	A4			
20~⩽50 ±0.25	DESIGN			Scale		PART NAME: HZW-HEE-032-FSP		
50~⩽80 ±0.35	CHECK			Sheet		Drawing NO.		REV
80~⩽120 ±0.50	APPROVE			Proj.		Material		A